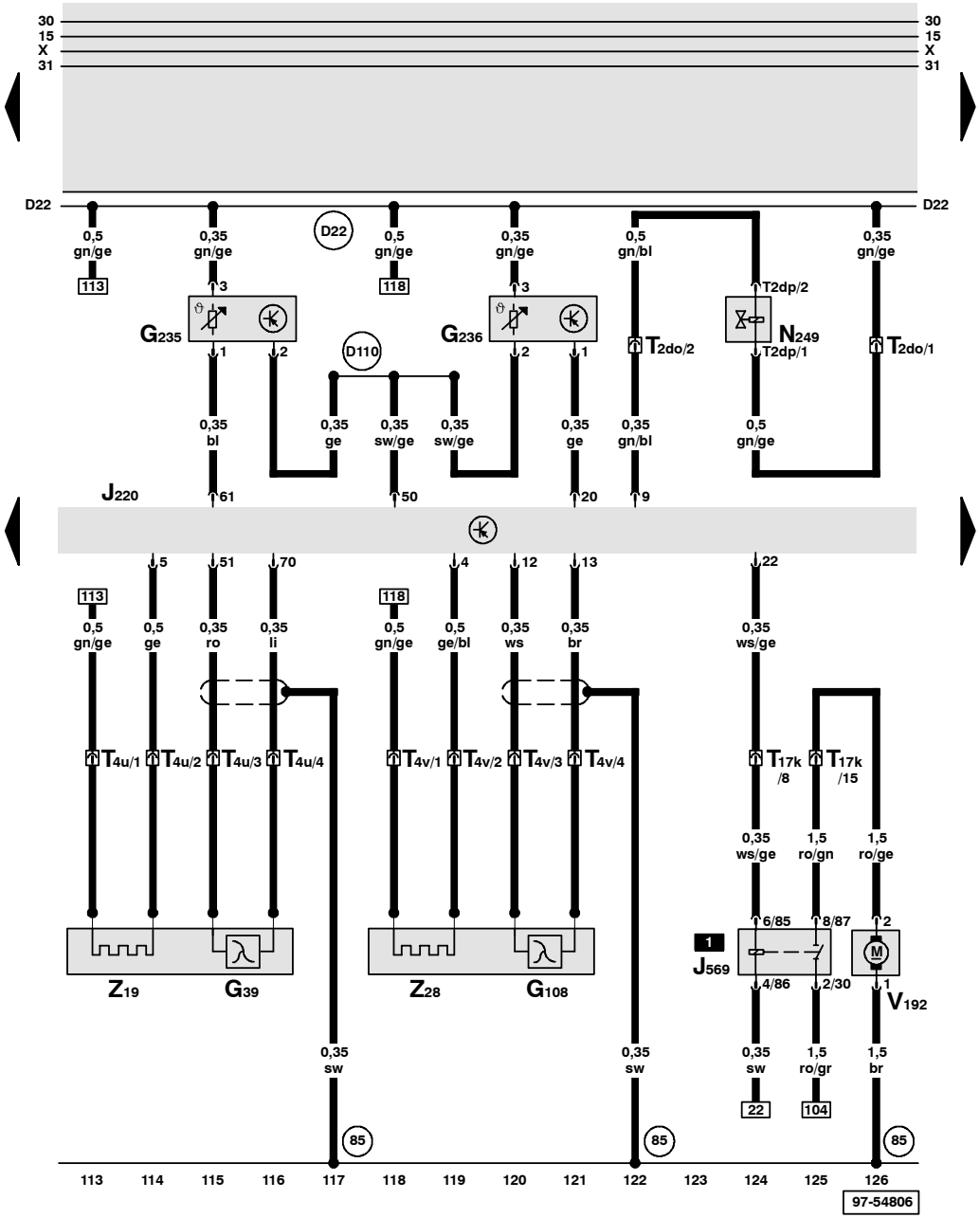

Motronic Engine Control Module, Heated Oxygen Sensors, Sensors for Exhaust Temperature, Recirculating Valve for Turbocharger, Brake Booster Relay

G39 - Heated Oxygen Sensor (HO2S)
G108 - Heated Oxygen Sensor (HO2S) 2
G235 - Sensor -1- for exhaust temperature
G236 - Sensor -2- for exhaust temperature
J220 - Motronic Engine Control Module (ECM)
J569 - Brake Booster relay
N249 - Recirculating valve for turbocharger
T2do - Connector 2 pin, black, for Recirculating valve for turbocharger
T2dp - Connector 2 pin, green, on Recirculating valve for turbocharger
T4u - Connector 4 pin, black, heated oxygen sensor
T4v - Connector 4 pin, black, heated oxygen sensor 2
T17k - Connector 17 pin, red, connector station electronic box plenum chamber
V192 - Brake System Vacuum Pump
Z19 - Oxygen Sensor (O2S) Heater
Z28 - Oxygen Sensor (O2S) 2 Heater

85 - Ground connection -1-, in engine compartment wiring harness
D22 - Connector (over fuse 234), in wiring harness front, right
D110 - Wire connection -8-, in engine compartment wiring harness

ws = white
sw = black
ro = red
br = brown
gn = green
bl = blue
gr = grey
li = violet
ge = yellow
or = orange